LONG SEAMS	
COURSE	ORIENTATION
1	210°

*VERT – TOP TO BOTTOM

Ship loose items:
NONE

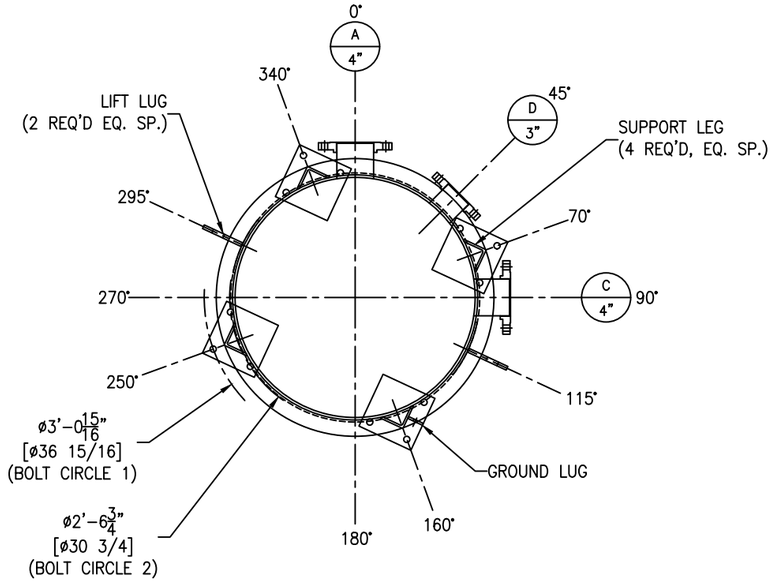

SLOPE DOWN
TOWARDS 90°

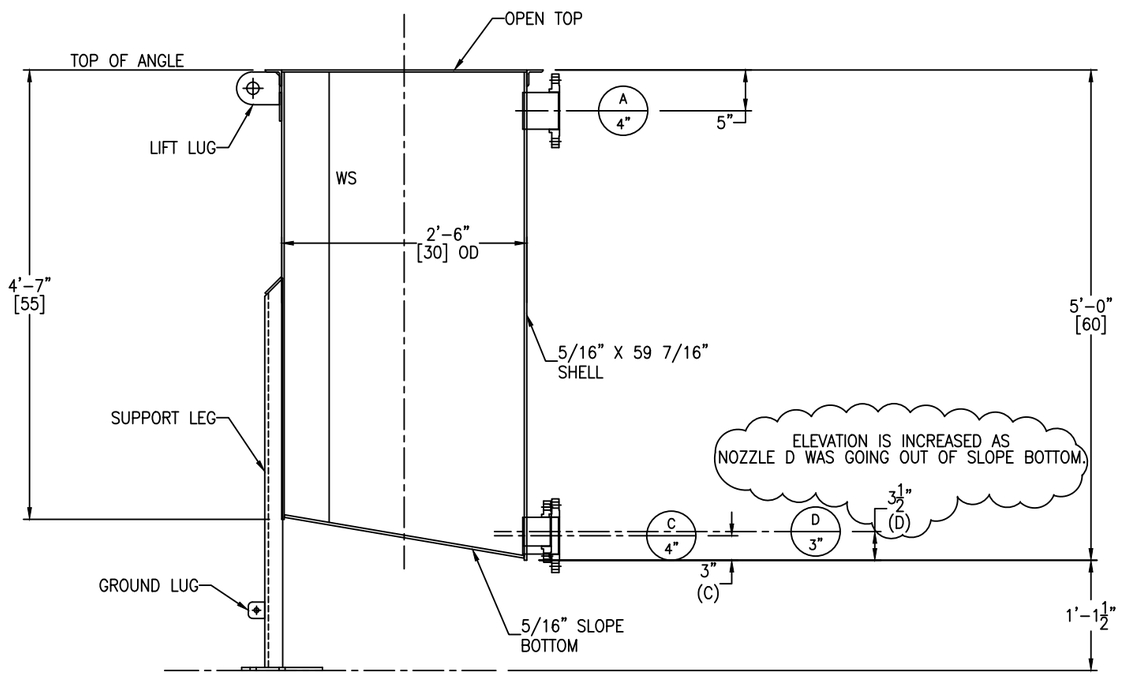

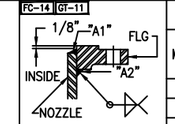

FIGURE NO. 1

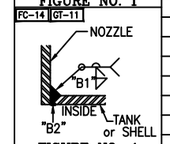

FIGURE NO. 4

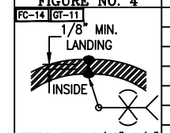

SHELL THK. 5/16"–3/4"
FIGURE NO. 10

NOZZLE SCHEDULE

MARK	SERVICE	SIZE	RATING	TYPE / STYLE	NECK SCHED.	PROJECTION EXT. (℄)	PROJECTION INT. (MIN.)	WELD FIGURE	REPAD SIZE (WIDTH X THK.)	WELD SIZE "A1"	WELD SIZE "A2"	WELD SIZE "B1"	WELD SIZE "B2"	WELD SIZE "C1"	WELD SIZE "C2"
A	OVERFLOW	4"	150#	RFSO	40S	4"	–	1,4	–	1/4	3/8	1/4	1/8	–	–
C	PRODUCT OUTLET	4"	150#	RFSO	40S	4"	–	1,4	–	1/4	3/8	1/4	1/8	–	–
D	DP CELL	3"	150#	RFSO	40S	3"	–	1,4	–	1/4	5/16	1/4	1/8	–	–

MATERIALS OF CONSTRUCTION

	VESSEL
SHELL	SA240–316/316L
FLAT BOTTOM	SA240–316/316L
RIM ANGLE	SA479–304/304L
NOZZLE NECKS	SA312–316/316L WLD
NOZZLE FLANGES	SA182F–316/316L
MANWAY NECKS	–
MANWAY FLANGES	–
GASKETS	–
BOLTS/STUDS	–
NUTS	–
REPADS	SA240–304/304L
COUPLINGS	–
SUPPORTS/HOLD DOWNS	SA479–304/304L & SA240–304/304L
LIFTING LUGS	SA240–304/304L
VACUUM RINGS	–
INSULATION RINGS	–
GROUND LUG	SA240–304/304L
BAFFLE	–
LADDER	–
TANK CLIPS (LADDER)	–
HANDRAIL	–
HANDRAIL CLIPS	–
PLATFORM	–
PLATFORM CLIPS	–
DIPTUBE SUPPORT	–
JACKET SHELL	–
JACKET HEADS	–
JACKET NOZZLE NECKS	–
JACKET NOZZLE FLANGES	–

DESIGN DATA

	VESSEL
DESIGN AND FAB. CODE	API650 (AS APPLICABLE)
CERT. STAMP REQ'D.	NO
DESIGN PRESSURE	ATM
DESIGN TEMPERATURE	120° F
MIN. DESIGN METAL TEMP.	–20° F @ ATM
OPERATING PRESSURE	–
OPERATING TEMPERATURE	–
JOINT EFFICIENCY HEADS	0.70
JOINT EFFICIENCY SHELL	0.70
CORROSION ALLOWANCE	0"
SPECIFIC GRAVITY	1.0
EARTHQUAKE ZONE	Ss = (0.3) S1 = (0.094)
WIND LOAD	109 MPH
STRESS RELIEF	NOT REQ'D
RADIOGRAPHIC EXAM	NOT REQ'D
DYE PENETRANT EXAM	NOT REQ'D
MAGNETIC PARTICLE EXAM	NOT REQ'D
HYDROSTATIC TEST	FULL OF WATER
PNEUMATIC TEST	NOT REQ'D
JKT HYDRO TEST	–
JKT DESIGN AND FAB. CODE	–
JKT CERT. STAMP REQ'D.	–
JKT DESIGN PRESSURE	–
JKT DESIGN TEMPERATURE	–
JKT MIN. DESIGN METAL TEMP.	–
JKT OPERATING PRESSURE	–
JKT OPERATING TEMPERATURE	–
JKT JOINT EFFICIENCY HEADS	–
JKT JOINT EFFICIENCY SHELL	–

VESSEL FINISH

INTERIOR WELD TREATMENT:	SAV TANK STANDARD
EXTERIOR WELD TREATMENT:	SAV TANK STANDARD
SAV TANK FINISHING STANDARD:	SEE NOTE 6
INSULATION:	N/A
PAINTING:	N/A

VESSEL CAPACITY AND WEIGHTS

OPERATING CAPACITY	–
FULL CAPACITY	165 GAL.
EMPTY SHIPPING WEIGHT	850 LBS.
WEIGHT FULL OF WATER	2,300 LBS.
WEIGHT FULL OF PRODUCT	2,300 LBS.

QUALITY CONTROL

ENG. _____ DATE: _____

Q.C. _____ DATE: _____

This drawing is issued for customer approval. please review, make approval changes (if any) in red. check the appropriate box, sign & date.

- ☐ Approval – no changes. Please proceed with fabrication.
- ☐ Approved as noted. Please proceed with fabrication
- ☐ Not approved. Please make changes and resubmit.

Customer signature _____ Date _____

GENERAL NOTES

1.) COVER ALL FLANGES, OPENINGS & MACHINED SURFACES PRIOR TO SHIPMENT UNLESS OTHERWISE NOTED.
2.) BOLT HOLES TO STRADDLE 0° & 180° UNLESS OTHERWISE NOTED.
3.) NOZZLE REPADS TO HAVE (1) ø1/4" TELL-TALE HOLES ON HORIZONTAL CENTER LINE.
ALL OTHER REPADS TO HAVE (1) ø1/4" WEEP HOLE AT LOWEST POINT ON PAD.
4.) MANUFACTURING TOLERANCE TO BE IN ACCORDANCE WITH API STANDARD 650 7.5.
5.) ASME MATERIALS TO CONFORM TO THE FOLLOWING: FLANGES – B16.5, FITTINGS – B16.9 & COUPLINGS – B16.11.
6.) PICKLE ALL EXTERIOR WELDS. PASSIVATE INTERIOR & EXTERIOR OF VESSEL.

REVISIONS

REV	D.BY	C.BY	DATE	DESCRIPTION
				AS BUILT
3	RS	–	4/17/25	CERTIFIED
2	AD	RS	3/7/25	APPROVAL REV 2
1	RS	AD	2/26/25	APPROVAL REV 1
0	RS	AD	1/24/25	APPROVAL

Savannah Tank & Equipment Corp.
1517 Telfair Road, Savannah, GA 31415
(912) 233–8902

DRAWN BY: RS
CHK'D BY: AD
APPROVED BY: NP
SCALE: 1" = 1'–0"

THIELE KAOLIN
#2 PRODUCT SURGE TANK
EQUIP. #
CUST. PO #247729

DRAWING NO.: 002–25–1 SHT 1 OF 2 REV. SET 3

FC-14

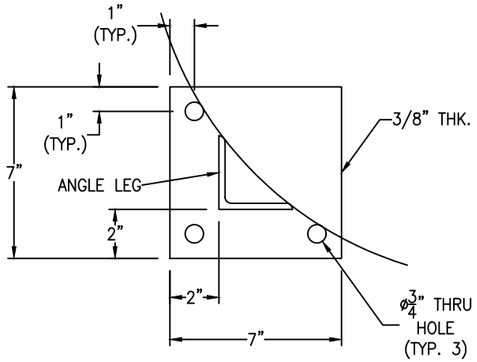

FOOT PLATE DETAIL

(4 REQ'D) SCALE: 3" = 1'-0"

FC-14

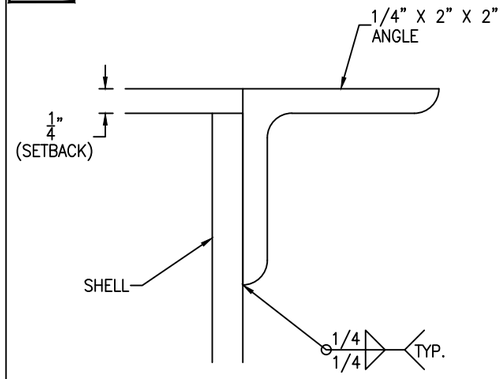

RIM ANGLE DETAIL

(1 REQ'D) SCALE: 1'-0" = 1'-0"

FC-14

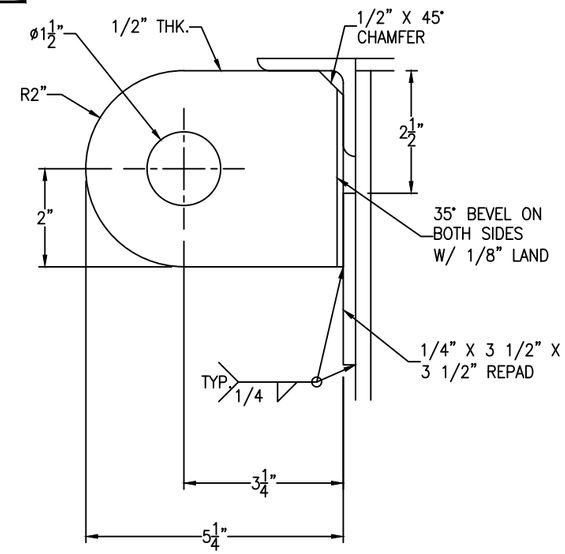

TANK WT. <= 5000#
SHACKLE PIN DIA. = 1"

ANGLE LIFT LUG DETAIL

(2 REQ'D) SCALE: 6" = 1'-0"

FC-14

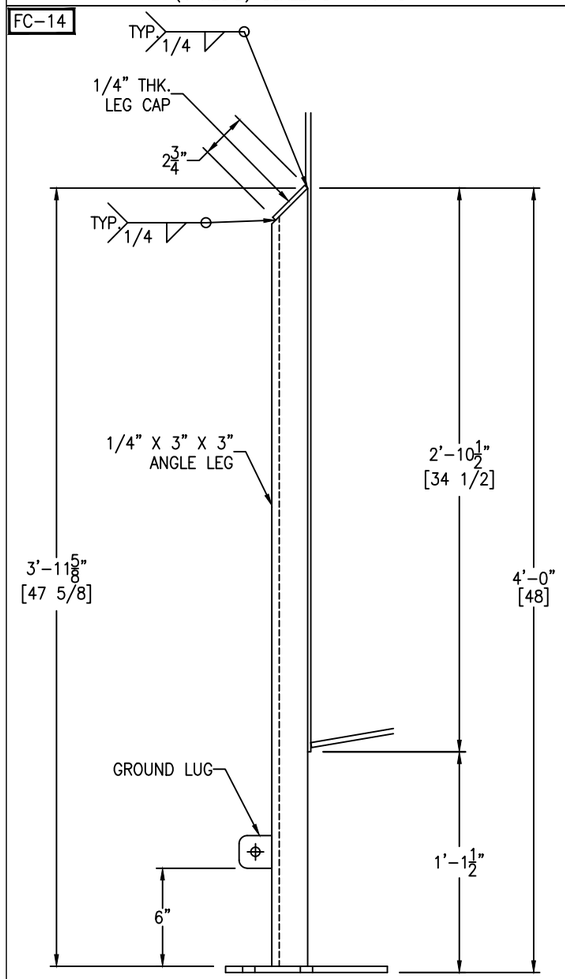

LEG DETAIL

(4 REQ'D) SCALE: 2" = 1'-0"

FC-14

*GROUND LUG IS LOCATED @160°.

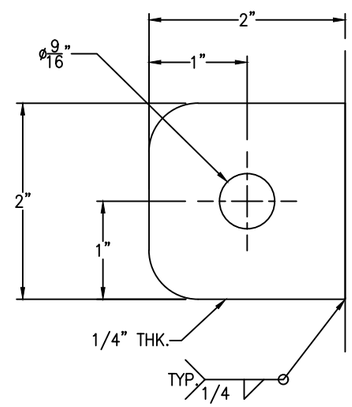

GROUND LUG DETAIL

(1 REQ'D) SCALE: 1'-0" = 1'-0"

FC-14

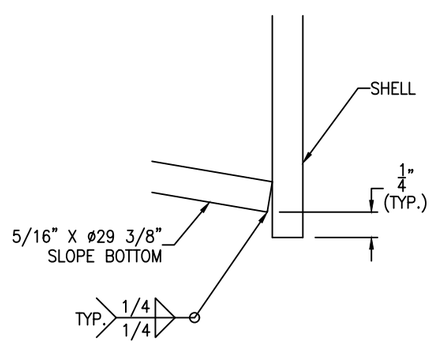

SLOPE BOTTOM DETAIL

SCALE: 1'-0" = 1'-0"

REV	D.BY	C.BY	DATE	DESCRIPTION
				AS BUILT
3	RS	-	4/17/25	CERTIFIED
2	AD	RS	3/7/25	APPROVAL REV 2
1	RS	AD	2/26/25	APPROVAL REV 1
0	RS	AD	1/24/25	APPROVAL

⚠ REVISIONS

Savannah Tank & Equipment Corp.
1517 Telfair Road, Savannah, GA 31415
(912) 233-8902

DRAWN BY: RS
CHK'D BY: AD
APPROVED BY: NP
SCALE: 1" = 1'-0"

THIELE KAOLIN
#2 PRODUCT SURGE TANK
EQUIP. #
CUST. PO #247729

DRAWING NO.: 002-25-2 SHT 2 OF 2 REV. SET 3